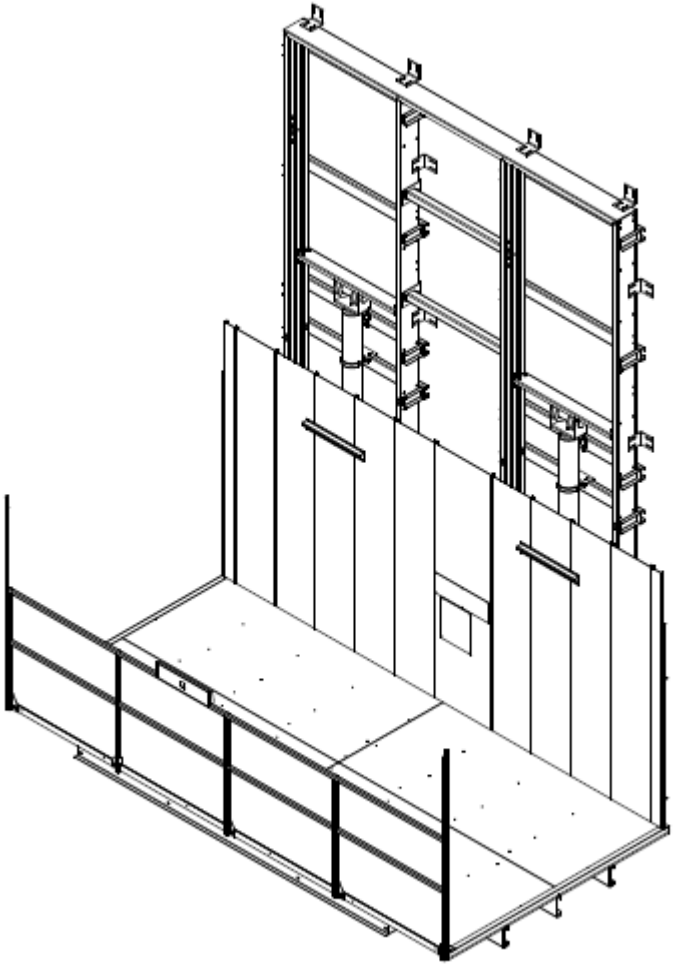

KTS2/M
2200Kgr
3000Kgr

PLANNING DATA

ΤΥΠΟΣ Technical data	KTS 2200 Kgr	KTS 3000 Kgr
max Rated Load[Kg]	**2200**	**3000**
Number of vehicle	**1**	**1**
Max Travel [m]	**9-12**	**10**
Max stops	**4**	**4**
max Lifting speed [m/sec]	**0,15**	**0,13**
min Shaft length [mm]	**4540**	**4540**
min Shaft width [mm]	**2500**	**2500**
min Pit depth [mm]	**400**	**500**
min Headroom [mm]	**2700**	**2700**
Platform Length[mm]	**4500 έως 5500**	**4500 έως 5500**
Platform Width [mm]	**2100-2500**	**2100-2500**
Clear shutter width [mm]	**2100-2500**	**2100-2500**
Clear shutter height [mm]	**Max 2200**	**Max 2200**
Guides	**T125x82x16**	**T125x82x16**
Max distance between brackets [mm]	**1000**	**1000**
Piston	**KZA C 100 x 5** (KZA C 100 x 8,5)	**KZA 100 x 7**
Cylinder	**139,7 x 5,9**	**139,7 x 7,1**
Suspension	**2:1**	**2:1**
Chain type	**BL 634 (F = 10150Kp)**	**BL 634 (F = 10150Kp)**
Number of chains	**4**	**4**
Max oil pump [lit]	**75**	**75**
Elastic tube diameter	**¾”**	**¾”**
Motor Power [kw]	**9,5**	**12**
Tank	**T150**	**T250**
Block of valves	**KV1 S ¾”**	**KV1 S ¾”**

FORCES IN SHAFT KTS2/M

FORCES IN PIT

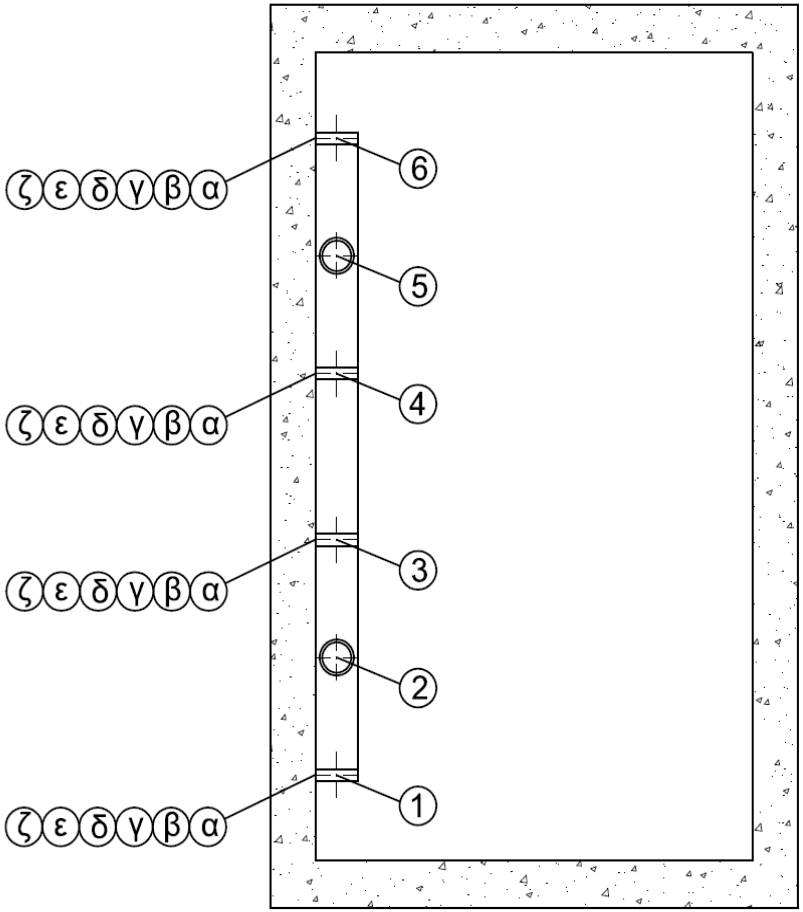

Rated Load 2200Kgr

Max forces for 12m travel under the pistons
$F_2 = F_5 = 23294$ N end $F_1 = F_3 = F_4 = F_6 = 3983$ N

Rated Load 3000Kgr

Max forces for 12m travel under the pistons
$F_2 = F_5 = 28200$N end $F_1 = F_3 = F_4 = F_6 = 3983$ N

Shaft tolerance: ± 20 mm
Dimensions in mm

For special cases please contact the lifting system department

FORCES IN SIDE WALLS

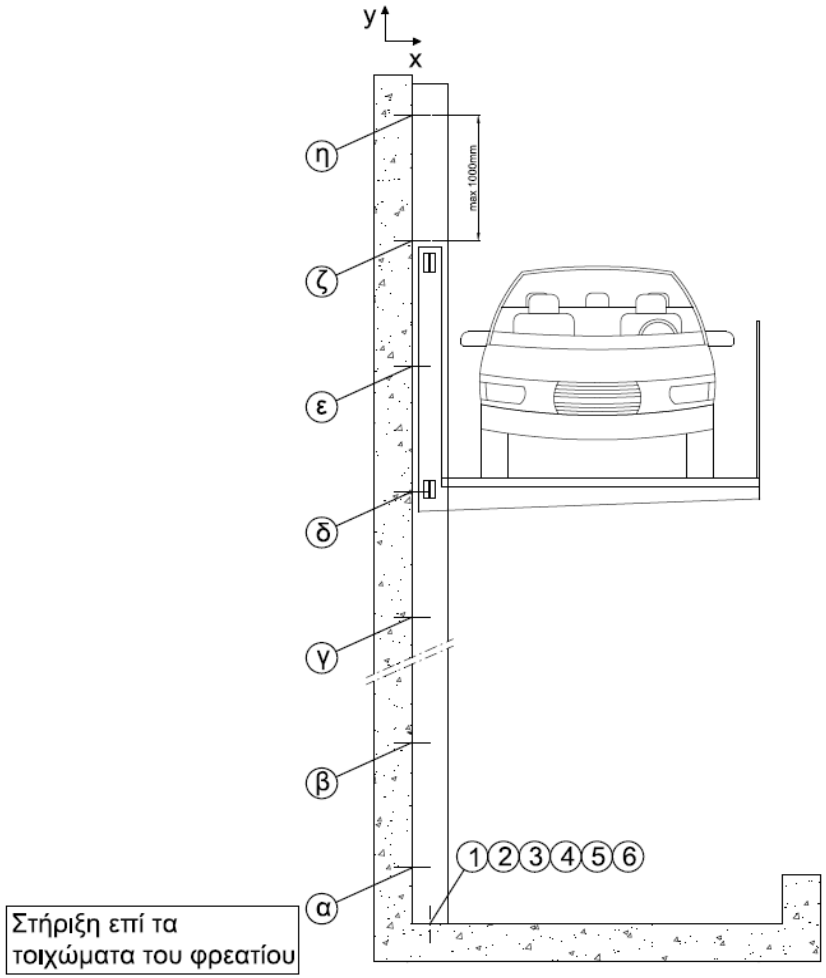

Rated Load 2200Kgr

Forces in shaft walls

$F'_x = F_x(\alpha,\beta,\gamma,\delta,\varepsilon,\zeta,\eta) = 6710N$ και $F'_y = F_y(\alpha,\beta,\gamma,\delta,\varepsilon,\zeta,\eta) = 1476N$

Rated Load 3000Kgr

Forces in shaft walls

$F'_x = F_x(\alpha,\beta,\gamma,\delta,\varepsilon,\zeta,\eta) = 8313N$ και $F'_y = F_y(\alpha,\beta,\gamma,\delta,\varepsilon,\zeta,\eta) = 2294N$

DIMENSIONS FOR THE SHAFT – KTS2/M

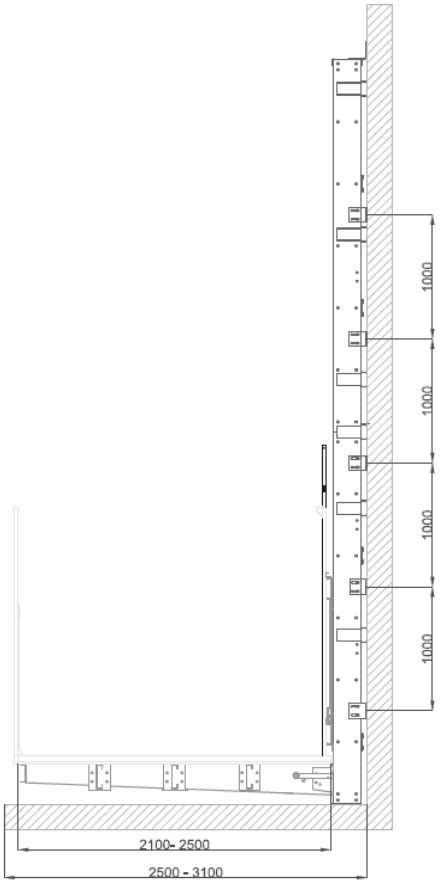

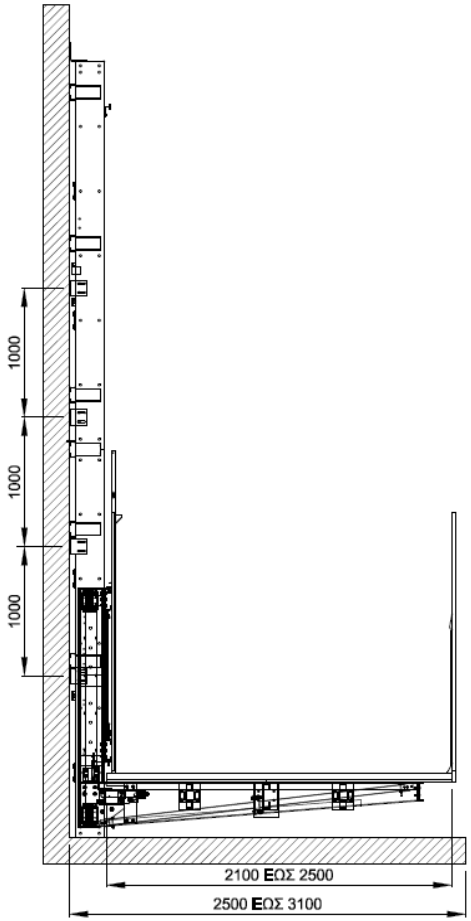

KTS2/M 2200Kgr	
Width of Platform	2100-2500
Width of shaft	2500-2900
Min Pit Depth	400
Min Headroom	2700
Distance between brackets	1000

KTS2/M 3000Kgr	
Width of Platform	2100-2500
Width of shaft	2500-2900
Min Pit Depth	500
Min Headroom	2700
Distance between brackets	1000

Shaft tolerance: ± 20 mm
Dimensions in mm

For special cases please contact the lifting system department

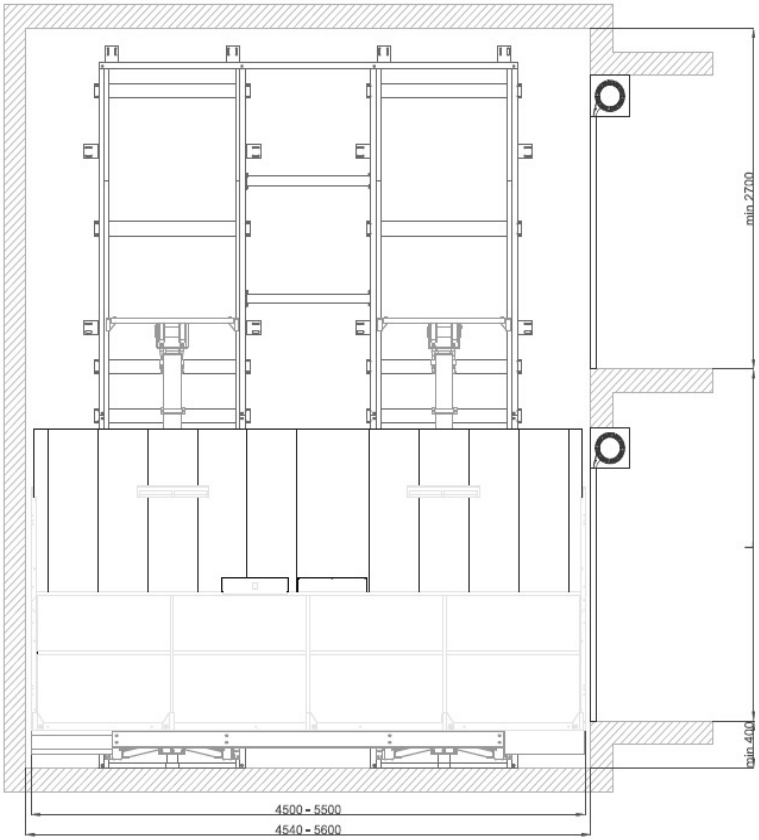

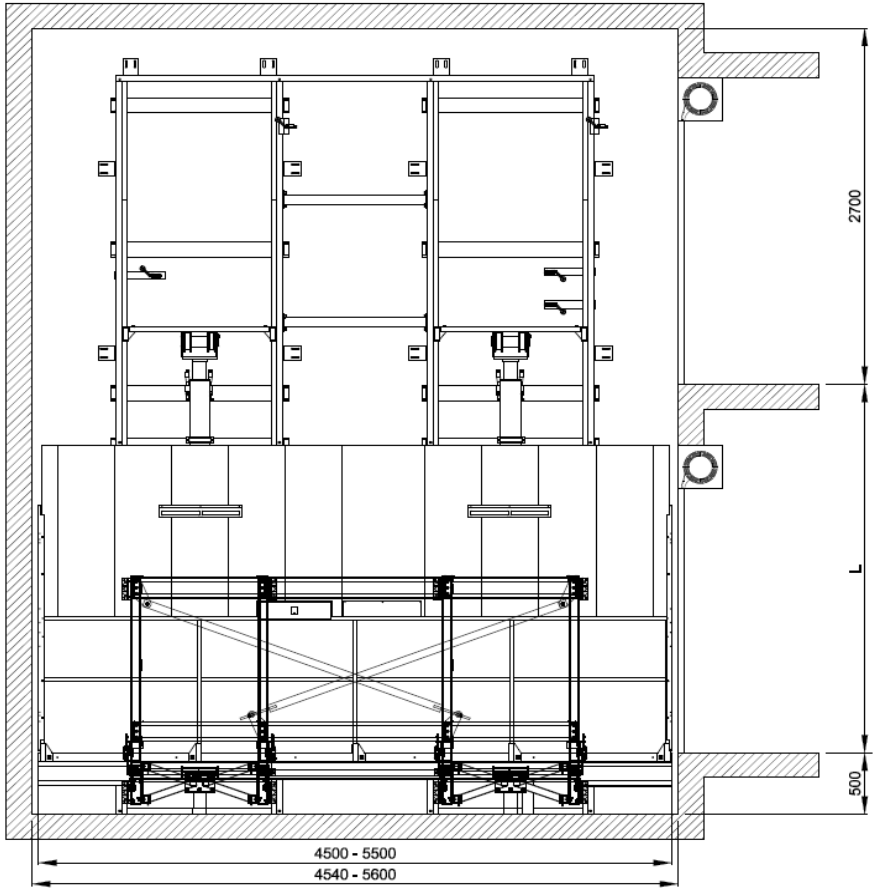

KTS2/M 2200Kgr	
Length of Platform	4500-5500
Length of shaft	4540-5600
Max Travel	12000
Min Pit Depth	400
Min Headroom	2700

KTS2/M 3000Kgr	
Length of Platform	4500-5500
Length of shaft	4540-5600
Max Travel	10000
Min Pit Depth	500
Min Headroom	2700

Shaft tolerance: ± 20 mm
Dimensions in mm

For special cases please contact the lifting system department

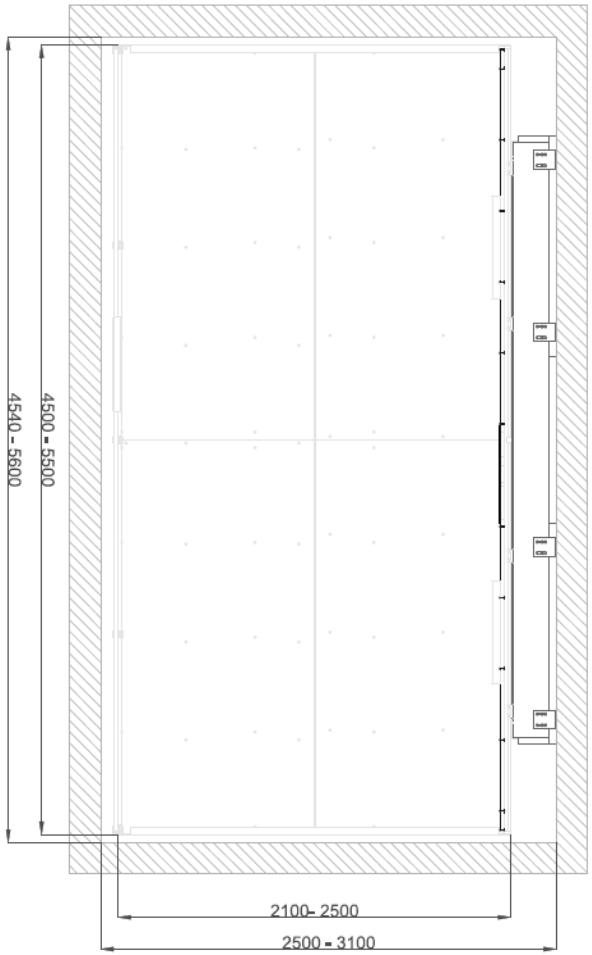

KTS2/M 2200Kgr	
Length of Platform	4500-5500
Length of shaft	4540-5600
Width of Platform	2100-2500
Width of shaft	2500-2900

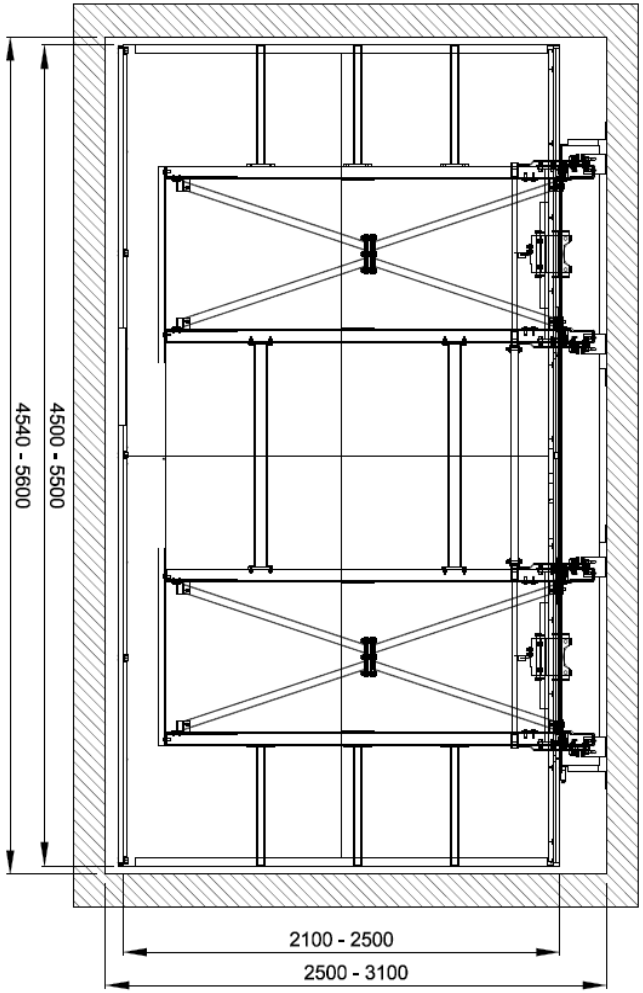

KTS2/M 3000Kgr	
Length of Platform	4500-5500
Length of shaft	4540-5600
Width of Platform	2100-2500
Width of shaft	2500-2900

Shaft tolerance: ± 20 mm
Dimensions in mm

Ver2_0_24/05/2012
For special cases please contact the lifting system department